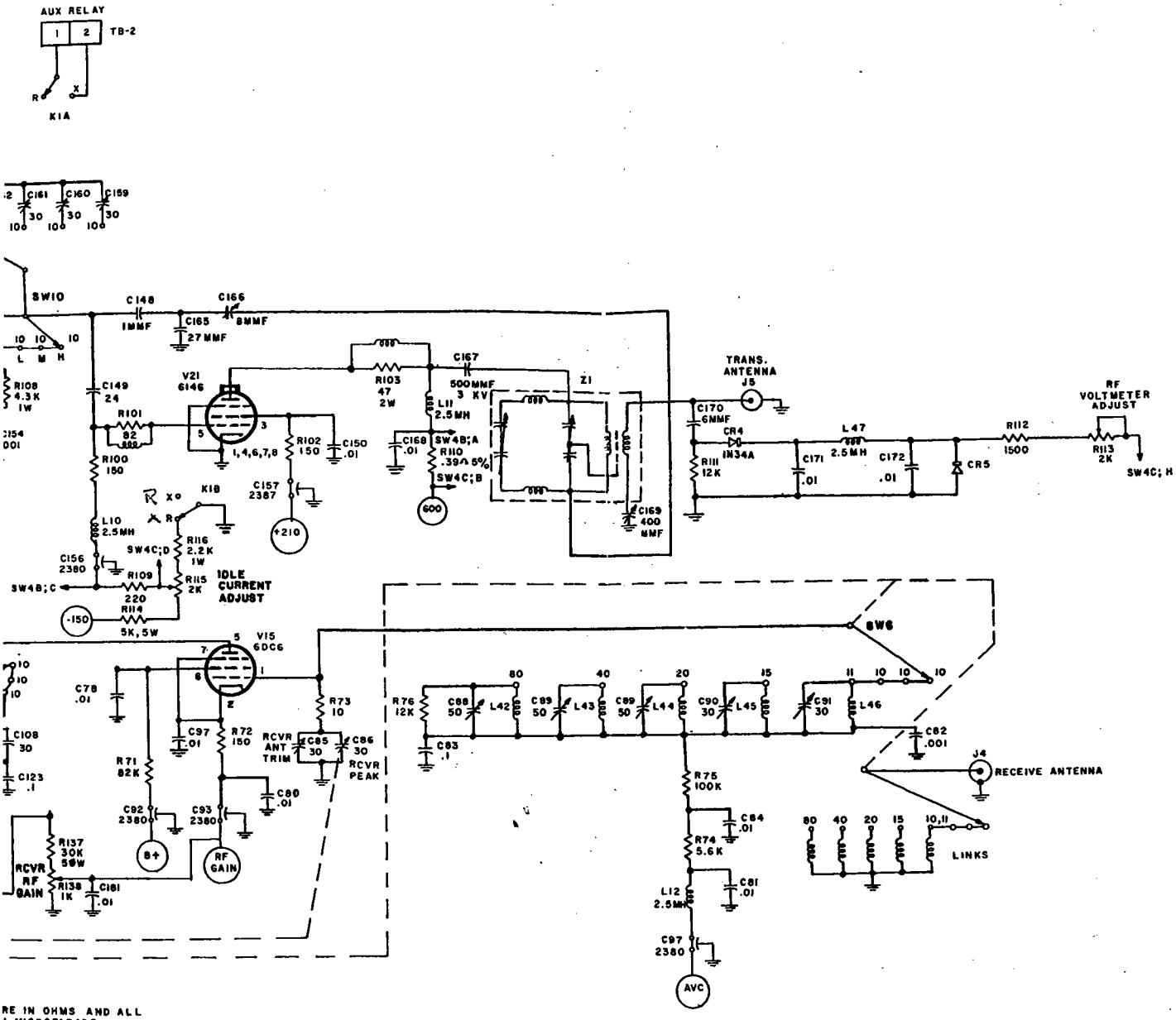
AUX RELAY
TB-2
K1A
SW10
C148
1MMF
C166
8MMF
C165
27MMF
C149
24
V21
6146
R101
82
R100
150
R108
4.3K
1W
R102
150
C150
.01
C157
2387
+210
R103
47
2W
C167
500MMF
3 KV
L11
2.5MH
C168
.01
SW4B;A
R110
.39Ω 5%
SW4C;B
600
Z1
C169
400
MMF
TRANS.
ANTENNA
J5
C170
6MMF
CR4
1N34A
R111
12K
L47
2.5MH
C171
.01
C172
.01
CR5
R112
1500
RF
VOLTMETER
ADJUST
R113
2K
SW4C;H
K1B
L10
2.5MH
C156
2380
SW4C;D
R116
2.2K
1W
R115
2K
IDLE
CURRENT
ADJUST
SW4B;C
R109
220
-150
R114
5K,5W
V15
6DC6
C78
.01
C108
30
C123
.1
R71
82K
C97
.01
R72
150
RCVR
ANT
TRIM
C85
30
C86
30
RCVR
PEAK
R73
10
C80
.01
C92
2380
C93
2380
B+
RF
GAIN
R137
30K
5W
RCVR
RF
GAIN
R138
1K
C181
.01
SW6
R76
12K
C88
50
L42
C89
50
L43
C89
50
L44
C90
30
L45
C91
30
L46
C83
.1
C82
.001
J4
RECEIVE ANTENNA
R75
100K
C84
.01
R74
5.6K
C81
.01
L12
2.5MH
C97
2380
AVC
LINKS
RE IN OHMS AND ALL
MICROFARADS
ED.
MULTIWAFER SWITCHES
WAFER ONLY. THE POSITIONS
FERS.
LL IN ONE CAN.
E CAN.
V14
V15
V16
V17
V18
V19
V20
V21
C211
.01
C213
.01
C215
.01
C217
.01
C219
.01
C220
.01
L15
L16
L17
L18
L48
L53
C212
2380
C214
2380
C216
2380
C218
2380
C221
2380
6.3
DIAL ILLUMINATION

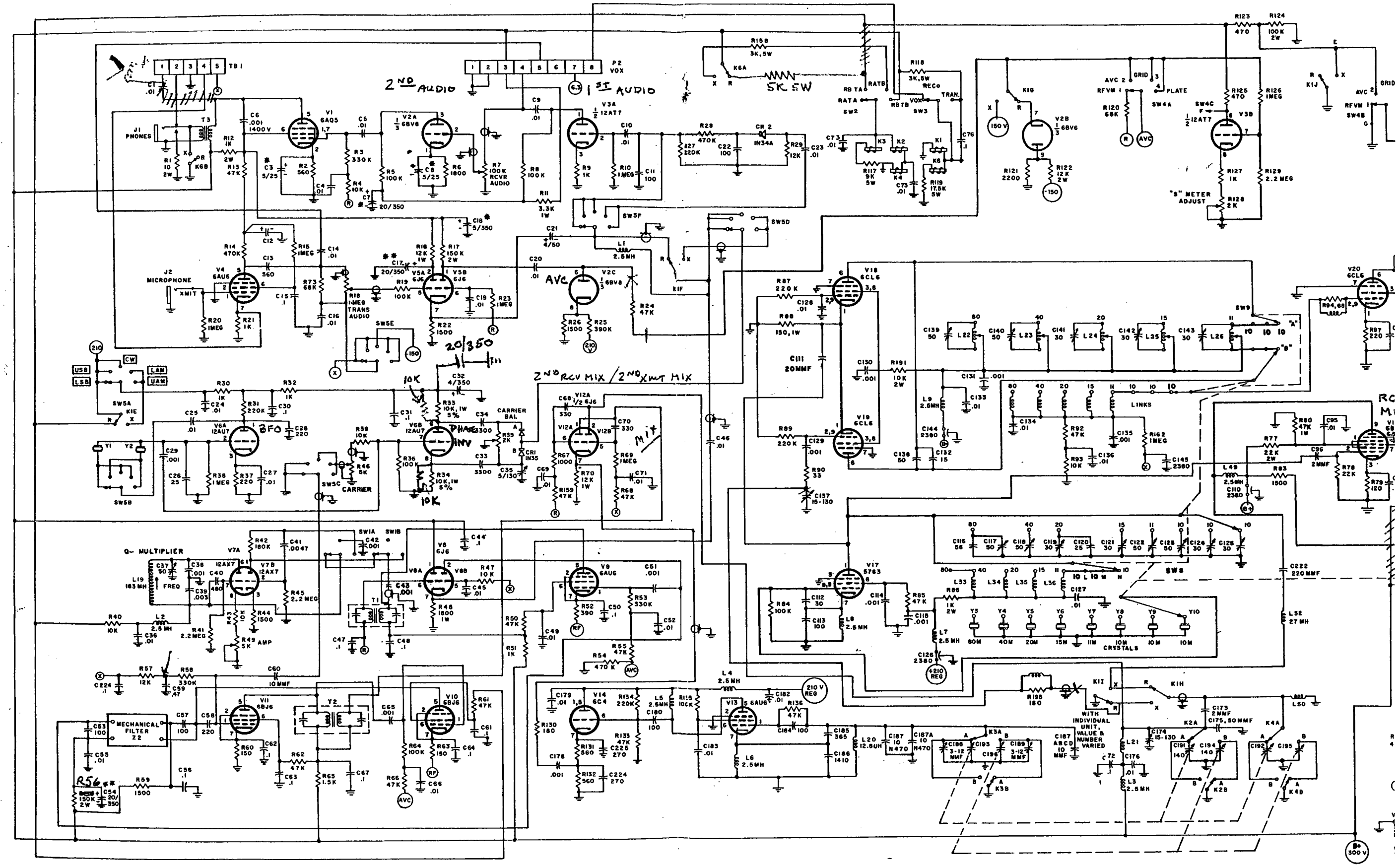


FIGURE 14. COSMOPHONE "35"-SCHEMATIC

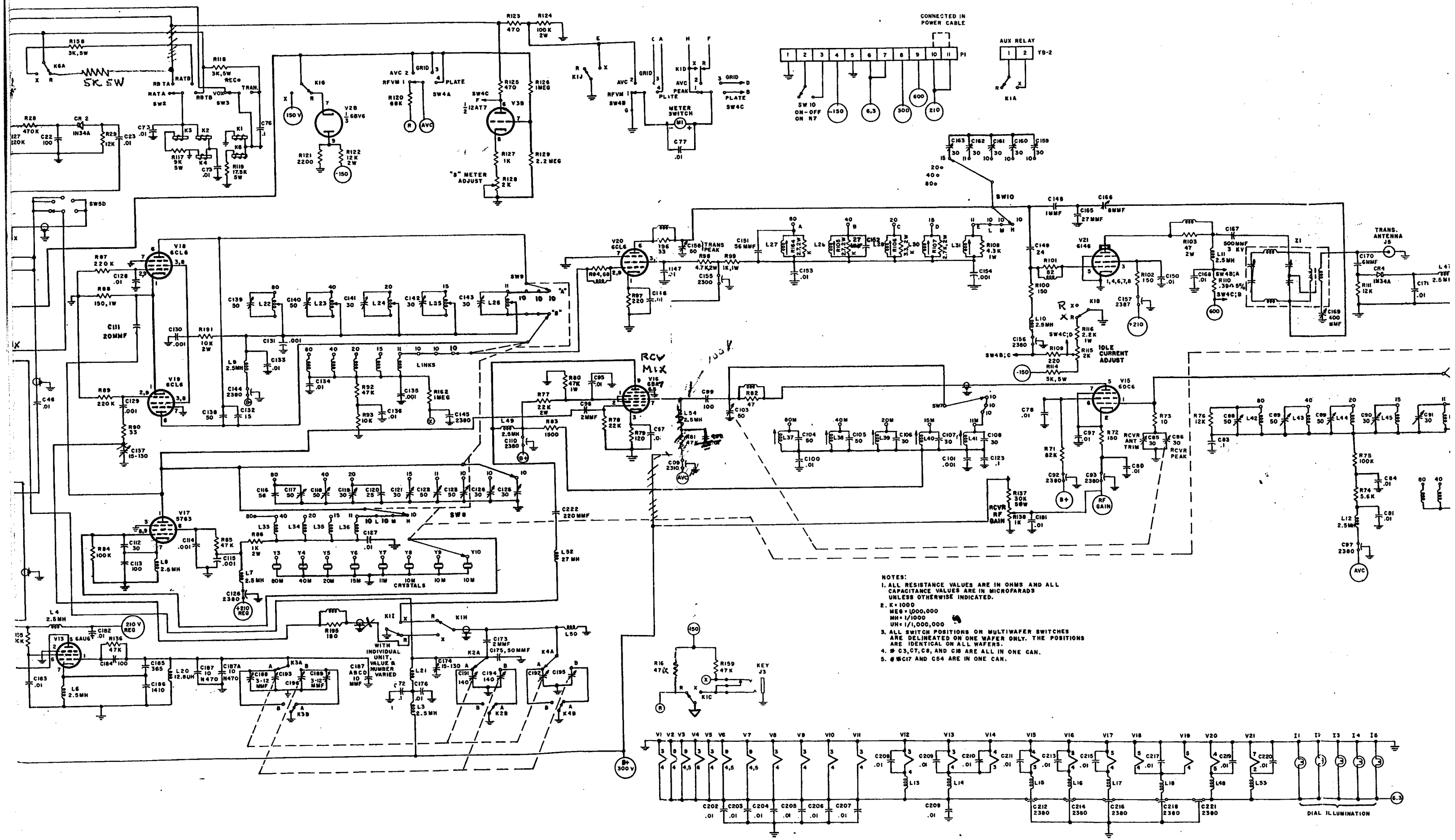


FIGURE 14. COSMOPHONE "35"-SCHEMATIC DIAGRAM